5V/4.0F
5.5V

5V/4.0F

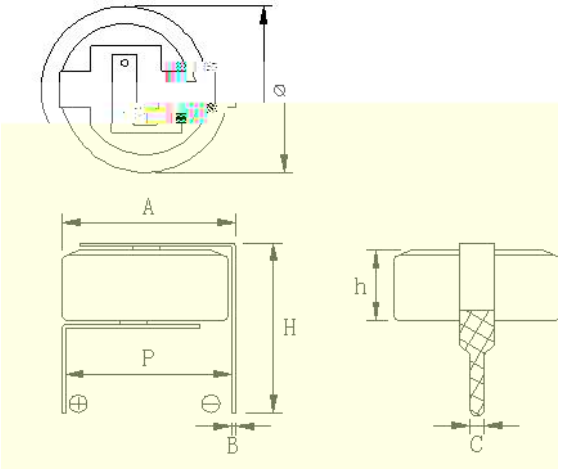
Ø
A
H
h
P
B
C

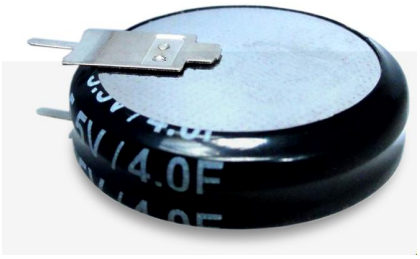
4.0F

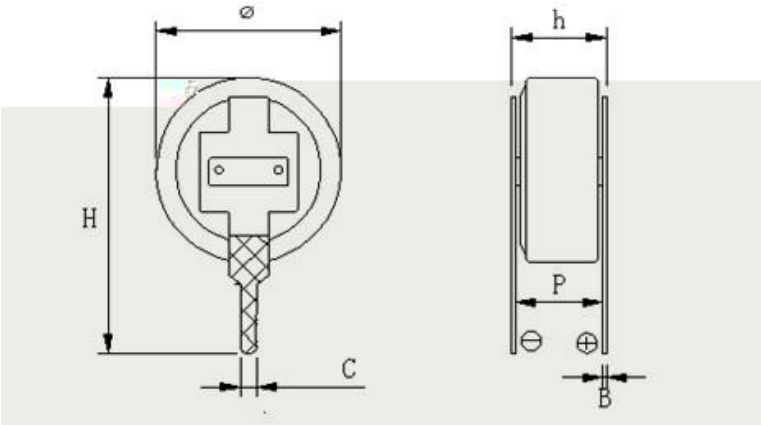
Ø
h
H
P
C
B

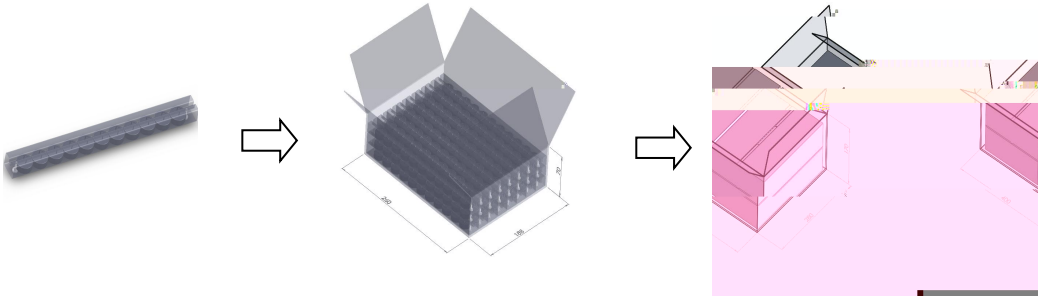

GTCAP

1

(1)

(2)

(3)

(4)

2

(1)
(2)
(3)
(4)

(5) IR